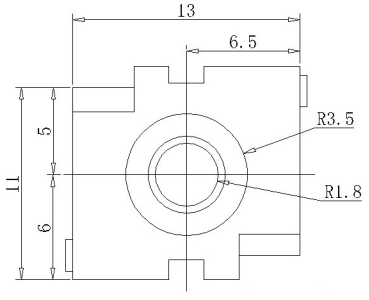

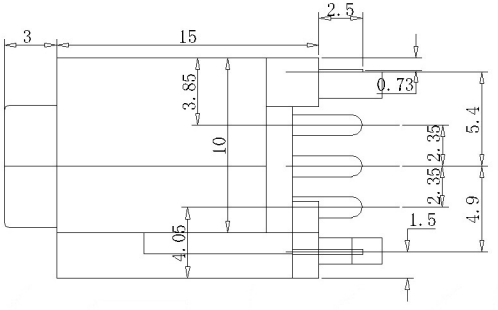

PJ-344X-1

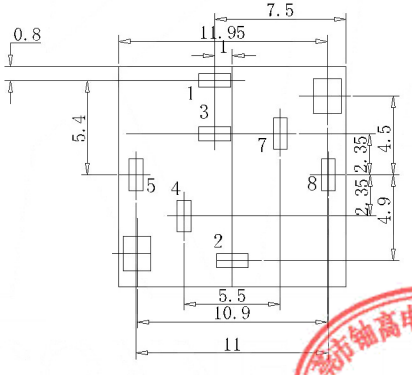

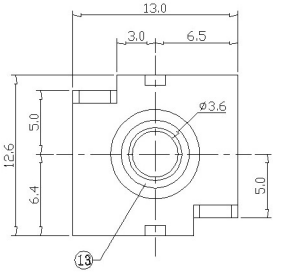

PJ-344X-2
copper sleeve

PJ-3440-	PJ-3441-	PJ-3442-	PJ-3443-
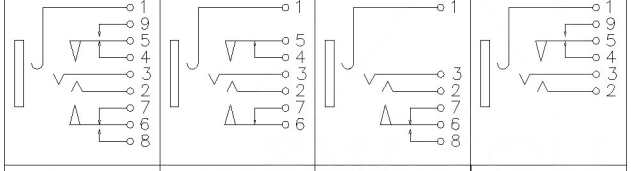			
PJ-3444-	**PJ-3445-**	**PJ-3446-**	**PJ-3447-**
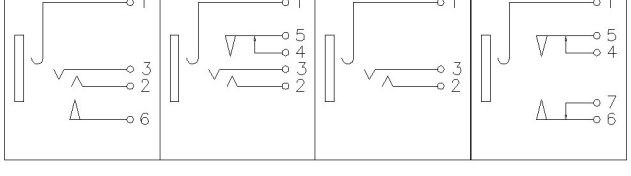			

	MATERIAL	PLATING
terminal 1	Phosphor Bronze	tin
terminal 2	Phosphor Bronze	tin
terminal 3	Phosphor Bronze	tin
terminal 4	Brass	tin
terminal 5	Phosphor Bronze	tin
terminal 6	Phosphor Bronze	tin
terminal 7	Brass	tin
terminal 8	Brass	tin
terminal 9	Brass	tin
plastic	Pbt	

东莞市铀高电子制品有限公司
正版认证
受控文件

MARK	DESCRIPTION	DATE	REVISED	APPROVED
△X				
△X				
△X				

REVISIONS

UNSPECIFIED TOLERANCES	
ANGLAR	±5°
X.X	±0.2mm
X.XX	±0.1mm
X.XXX	±0.05mm

DSND		DATE		SCALE: N/A	MODEL TYPE: 3.5 PHONE JACK
DWN		DATE		VIEW:	PART NO.:
CHKD		DATE		UNIT: mm	DWG NO.: PJ-344X-X
APPD		DATE		SIZE: A4	

东莞市铀高电子制品有限公司

WEIGHT	SHEET	REVISION
1.0g	1/1	A0