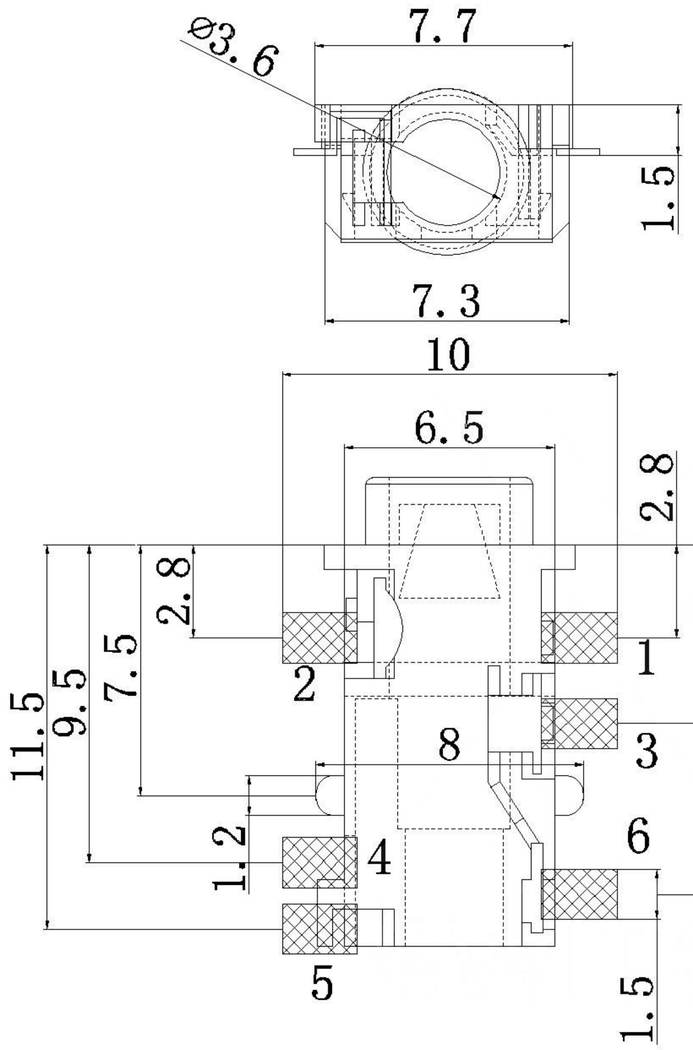

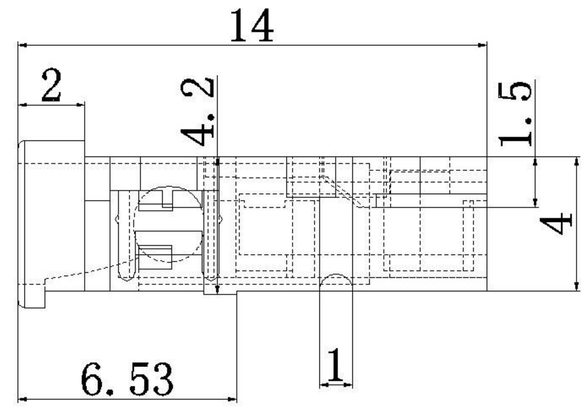

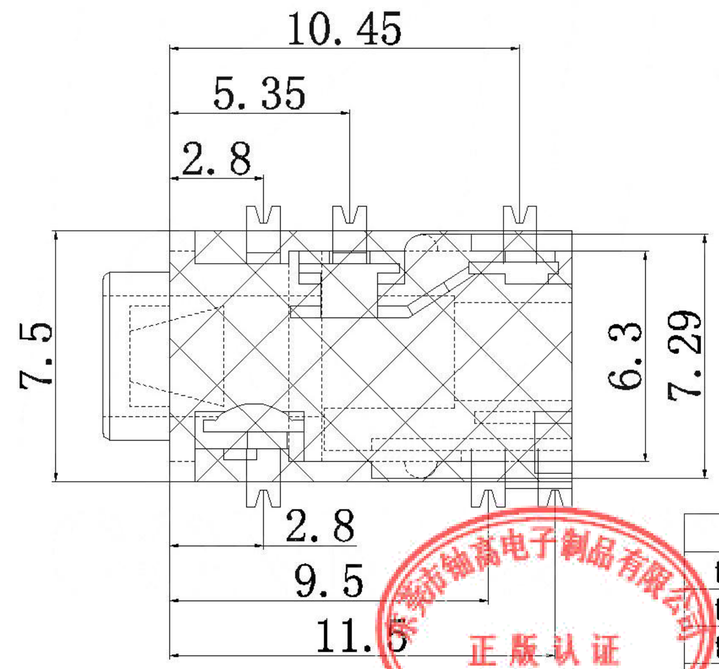

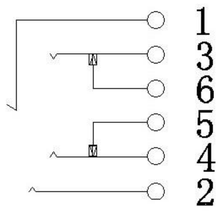

	MATERIAL	PLATING
terminal 1	Phosphor Bronze	Gold
terminal 2	Phosphor Bronze	Gold
terminal 3	Phosphor Bronze	Gold
terminal 4	Phosphor Bronze	Gold
terminal 5	Phosphor Bronze	Gold
terminal 6	Phosphor Bronze	Gold
plastic	High Temp. Thermoplastic	

东莞市铀高电子制品有限公司
正版认证
受控文件

MARK	DESCRIPTION	DATE	REVISED	APPROVED
△X				
△X				
△X				

REVISIONS

UNSPECIFIED TOLERANCES	
ANGLAR	±5°
X.X	±0.2mm
X.XX	±0.1mm
X.XXX	±0.05mm

DSND		DATE		SCALE: N/A
DWN		DATE		VIEW:
CHKD		DATE		UNIT: mm
APPD		DATE		SIZE: A4

东莞市铀高电子制品有限公司

MODEL TYPE: 3.5 PHONE JACK

PART NO.:

DWG NO.: PJ-342C

WEIGHT	SHEET	REVISION
1.0g	1/1	A0